雙層浪板成型機

DOUBLE LAYERS ROOFING FORMING MACHINE

Model//CHJ-A-08

依顧客之廠房坪數不足而設計之成型機(與單層浪板機雷同)

A machine designed according to the areas of factory buildings. (Similar to single Layer Roofing Forming Machine)

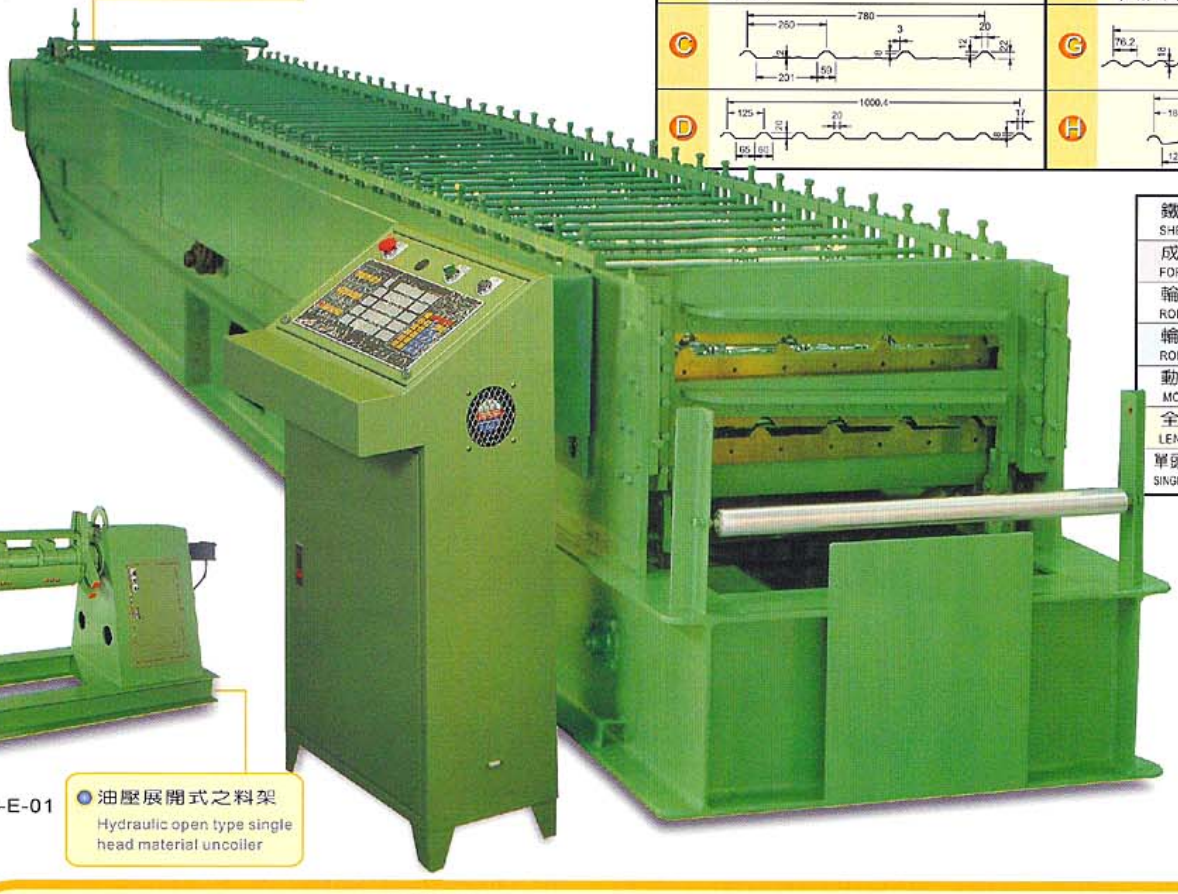

Model//CHJ-A-08

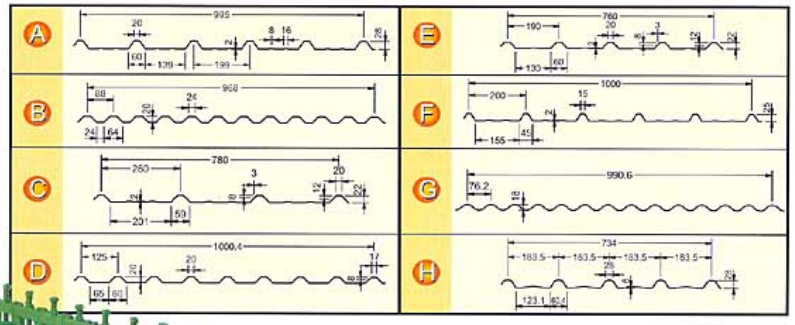

鐵板厚度 SHEET THICKNESS	0.3~0.8mm
成型速度 FORMING SPEED	20~24m PER MINUTE
輪模軸徑 ROLLER SHAFT DIA	ϕ75mm
輪模組數 ROLLER STATIONS	上UP 下DOWN 15~25
動力馬達 MOTOR OUTPUT	10~20hp
全長X全寬 LENGTH X WIDTH	L 8~12M W 1.4~1.8M
單頭放料架載重 SINGLE HEAD UNCOILER	5~8Ton

Model//CHJ-E-01
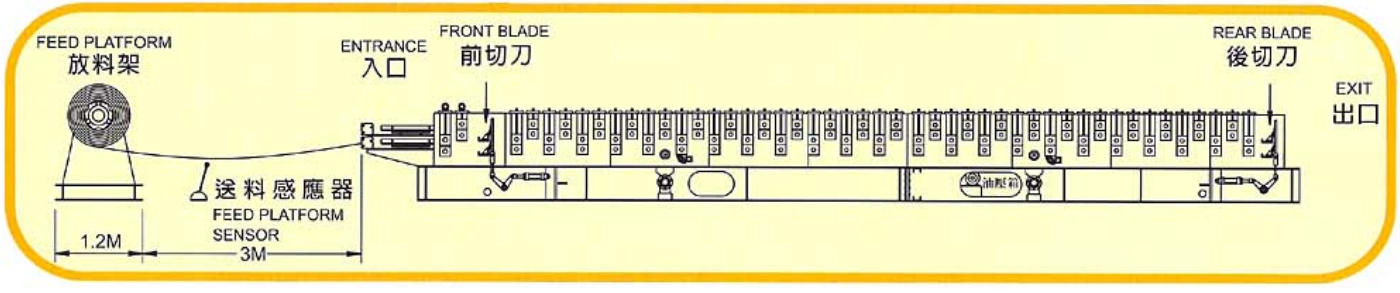
油壓展開式之料架
Hydraulic open type single head material uncoiler